Cable output length 2m:

Power :

One shielded class 6 cable coded (4x1.5mm²)1,2,3 green/yellow overall Ø10.2

Thermal sensors :

One shielded class 6 cable (2x2x0.25mm²) overall Ø7

Brown-White : PTC

Green-Yellow : KTY84

Minimum bending radius (except for the first 50mm) :

120mm for power cable

84mm for sensors cable

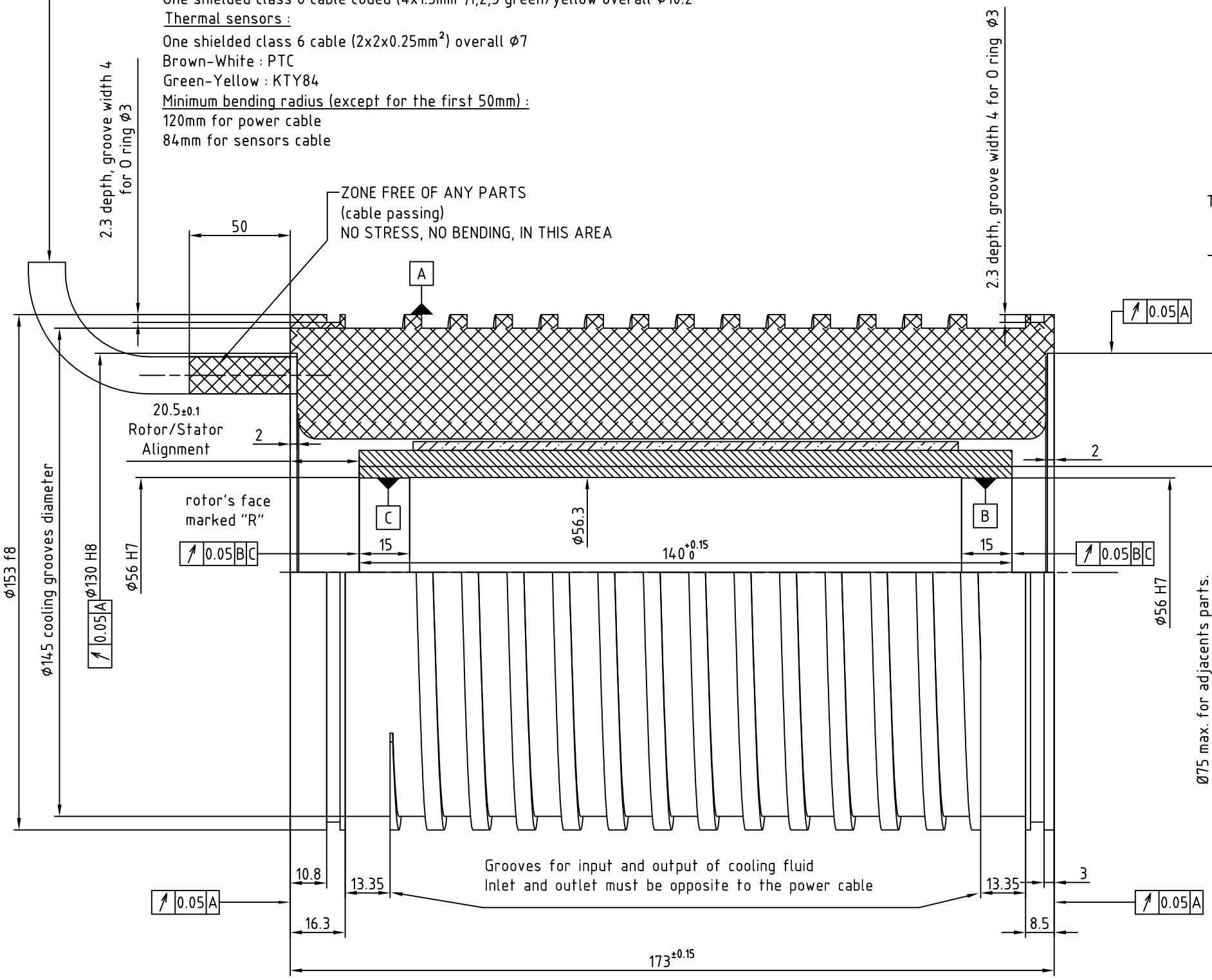

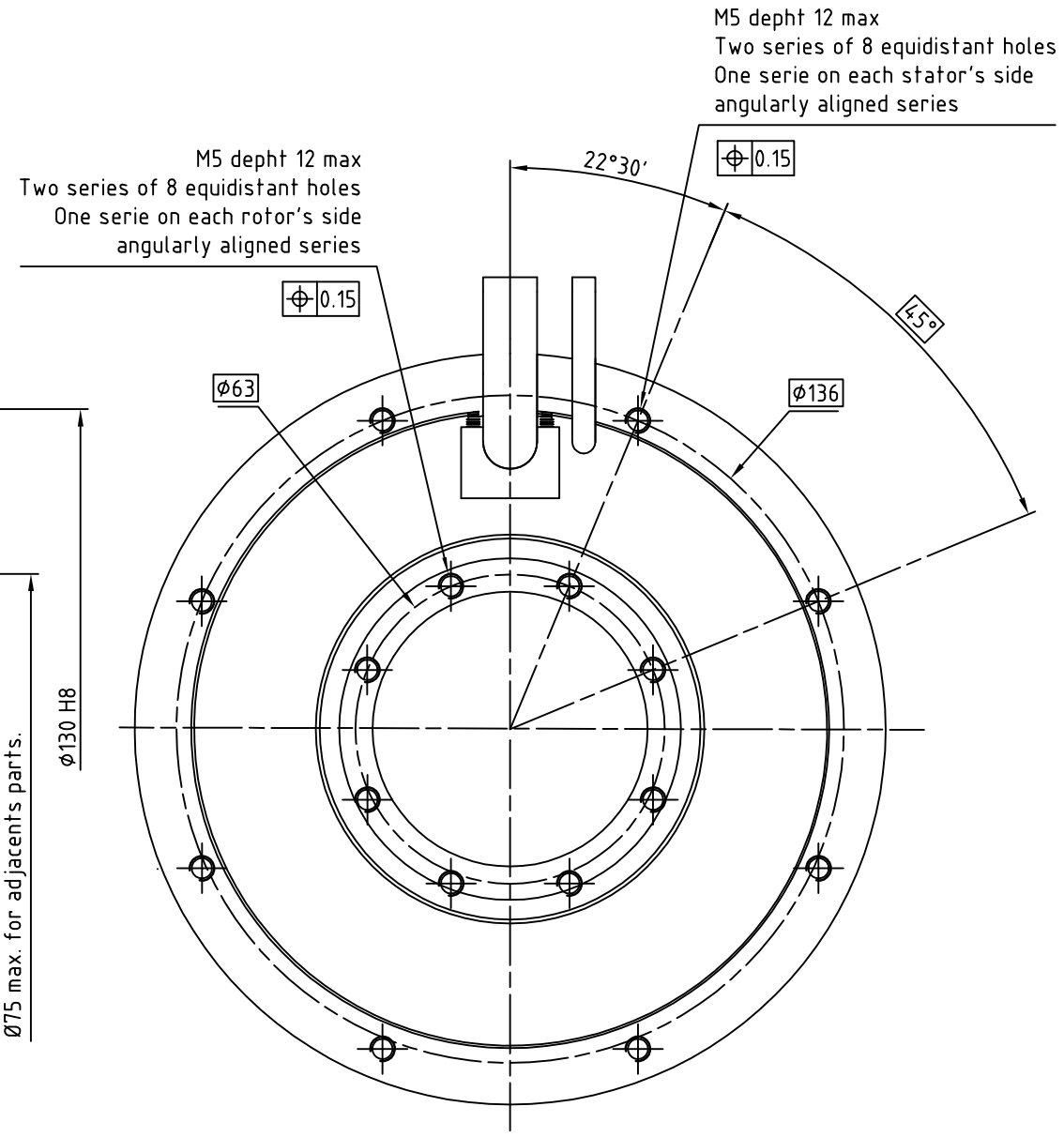

CAUTION: For a better safety, it is recommended that the cooling fluid inlet would be made through the hose located on the side opposed to the cabling, while the cooling fluid outlet will be made by the one located on the cable side.

NOTA:
Rotor is not fitted in the stator
For more information about mounting see document 145STK0-WA002

ALXION

AUTOMATIQUE & PRODUCTIQUE
Parc Technologique des Fossés Jean
92712 COLOMBES Cedex
Tél: 0141306304 - Fax: 0141306136

145STK4M2XXXXXX