Cable	Ø	R min.
2x2x0.25	7	84
4x1.5	10.2	120
4x2.5	11.4	135
4x4	13.1	155
4x6	15.9	190
4x10	18.8	225
4x16	24.0	290

Cable output length 2m:
Power :
One shielded class 6 cable coded 1,2,3 green/yellow
Thermal sensors :
One shielded class 6 cable (2x2x0.25mm²)
Brown-White : PTC
Green-Yellow : KTY84
Minimum bending radius (except for the first 50mm) :
See table

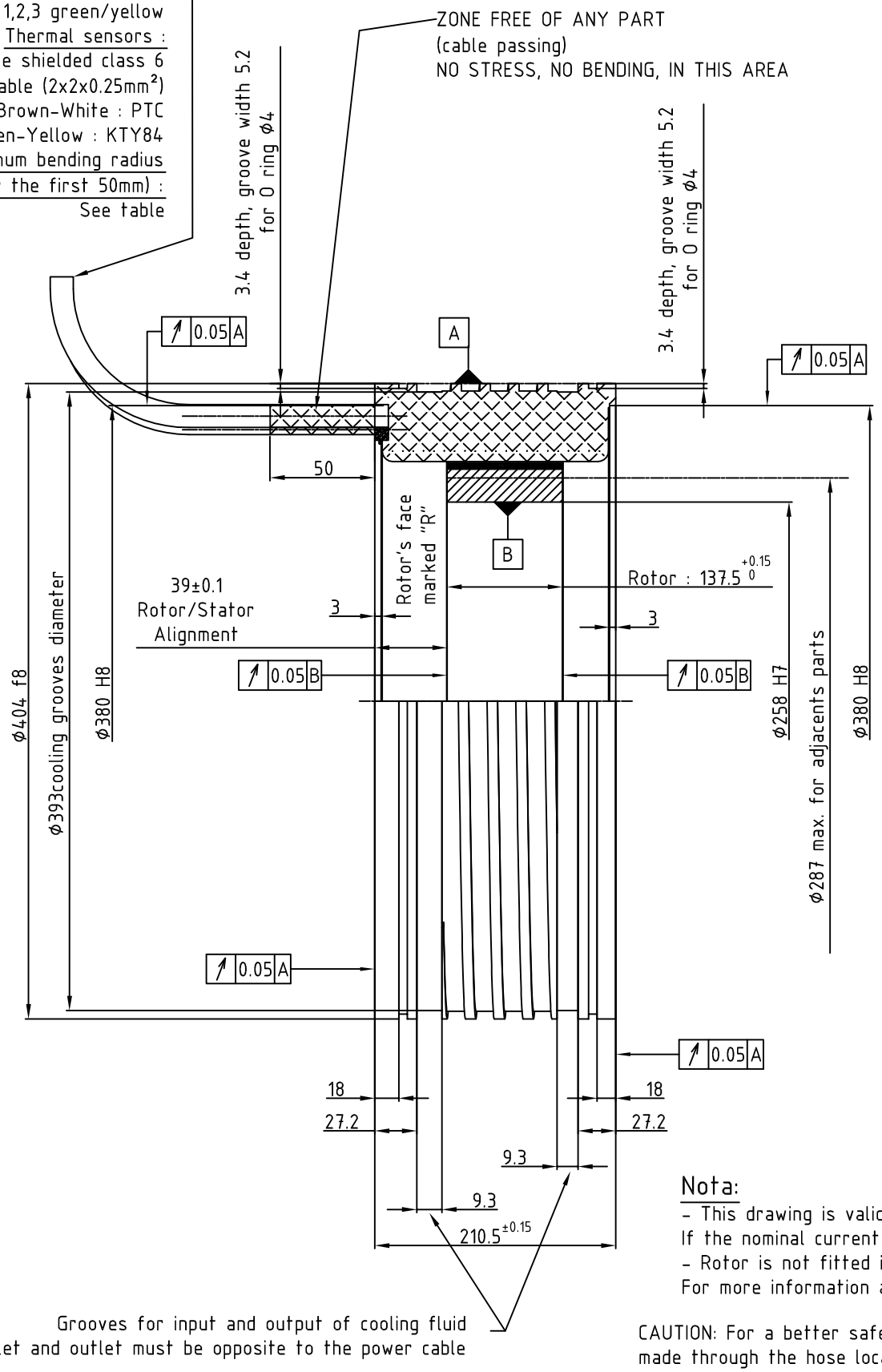

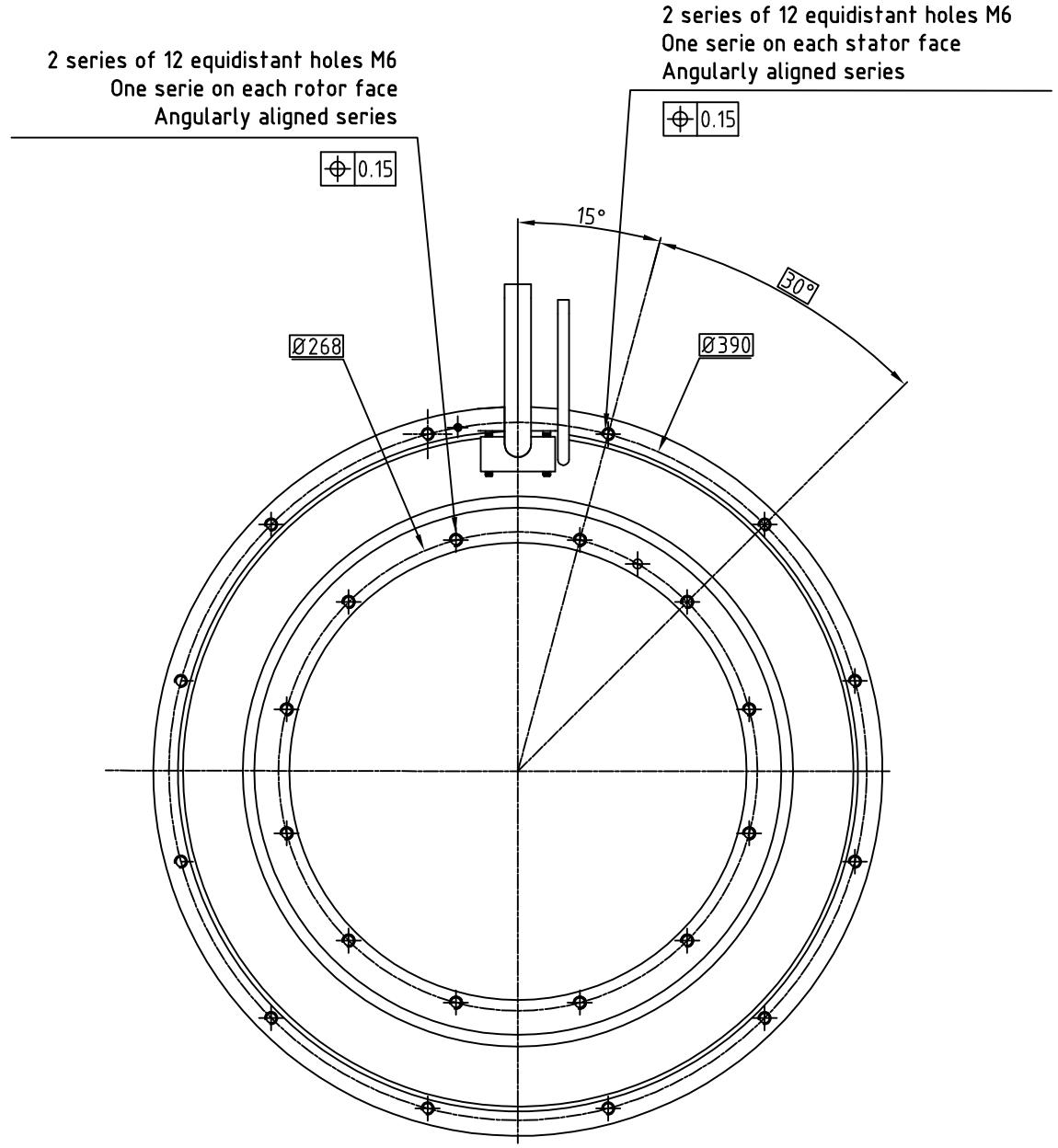

Nota:
- This drawing is valid only for motors with nominal current lower than 72 Amps. If the nominal current is greater than 72 Amps, please contact us.
- Rotor is not fitted in the stator
For more information about mounting see document 400STK0-WA002

CAUTION: For a better safety, it is recommended that the cooling fluid inlet would be made through the hose located on the side opposed to the cabling, while the cooling fluid outlet will be made by the one located on the cable side.

ALXION
AUTOMATIQUE & PRODUCTIQUE
Parc Technologique des Fossés Jean
92712 COLOMBES Cedex
Tél: 0141306304 - Fax: 0141306136

400STK5M2XXXXXX